GGM Gastro International GmbH

Weinerpark 16 48607 Ochtrup

Telephone: +49 (0) 2553 / 7220 0 Fax: +49 (0) 2553 / 7220 200
e-mail: technik@ggmgastro.com
web: www.ggmgastro.com

CODE: 0840.00030.31

POTATO PEELER 30KG

Model: KSEOZ

ver.23.5 Date:05.2023

SPARE PART LIST

Spare Part Item Code	Item Name	Picture Id.	Price	Curr.
2840.00030.12	PLASTIC DISC HANDLE			
6232.00010.31	BUTTON STOP AA42 SMCX	1		
6248.00009.00	TERMINAL STRIPS WGT4 (EARTH)	10		
2840.00010.52	CONTROL PANEL LOWER PLATE	11		
6259.00003.044	CABLE GLAND PG 16	12		
6233.00016.13	THERMIC RELAY 46 (ZE6) MOELLER(MINI)	13		
2KLP.460.00060213.9.01	COVER MOUNTING SHAFT	14		
2840.00030.11	PLEXIGLASS COVER	15		
2840.00030.03	PEELER DISC	18		
6259.00002.00	TIMER 0-4 min	2		
6261.00013.23	PLASTIC WATER SPRAY	20		
2KLP.460.10018035.9.01	SECURING PULLEY (Q18x35mm)	21		
2840.00010.49	COVER SECURING PART	22		
6261.00013.28	FRONT COVER	23		
6261.00013.30	FRONT COVER GASKET	24		
2KLP.460.10030012.9.01	ARM PULLEY	25		
2KLP.460.10030010.9.01	FRONT COVER PULLEY STAINLESSSTEEL	26		
2KLP.460.30012023.9.01	STAY BOLTS OF ARM PULLEY	27		
2840.00030.09	FRONT COVER ARM	29		
6232.00010.32	BUTTON START AA31 SMCX	3		
2840.00030.07	FRONT COVER GUIDE	30		
2840.00030.23	BOWL	31		
2KLP.460.03850086.9.02	PLASTIC MIDDLE PART FOR MOTOR FIXING	33		
2840.00030.15	MOTOR PULLEY	34		
6263.00001.05	V BELT 13*700	35		
6252.00000.51	MOTOR 1,5 KW 915D/D THREEPHASE 50 Hz B14 FLANGED	36		
6228.00011.39	OIL SEAL 35*62*10 NBR	39		
2840.00010.50	CONTROL PANEL PLATE	4		
6211.00240.06	BEARING 3206 2RS ORS	40		
2KLP.460.20400026.9.01	DISTANCE PART OF BEARING	41		
2840.F0030.17	SHAFT	44		
2840.00030.16	PULLEY	45		
2840.00030.18	MOTOR FIXING FLANGE	46		
2KLP.460.20130023.9.01	FRONT COVER STAY BOLT	47		
2840.00010.51	CONTROL BOX	5		
6232.00006.00	SWITCH	6		
6230.00014.12	MINI CONTACTOR DILEEM10 XTMC6A10 3KW	7		
2KLP.460.10010047.9.01	SECURING PIN (Q10x47)	8		

GGM Gastro International GmbH

Weinerpark 16 48607 Ochtrup

Telephone: +49 (0) 2553 / 7220 0 Fax: +49 (0) 2553 / 7220 200
e-mail: technik@ggmgastro.com
web: www.ggmgastro.com

CODE: 0840.00030.31

POTATO PEELER 30KG

Model: KSEOZ
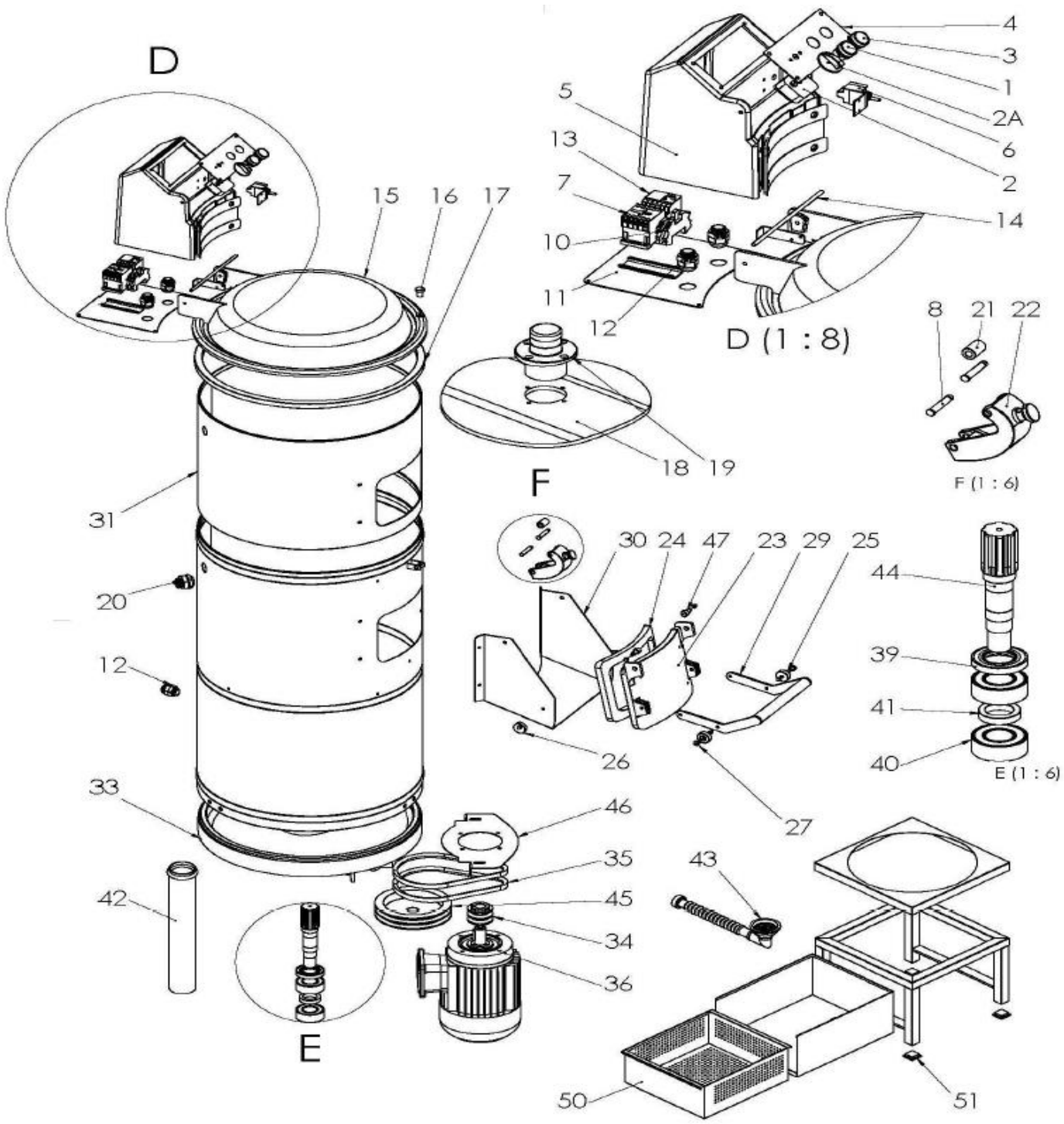
ver.23.5 Date:05.2023